This drawing is property of I. Arruti and must not be copied, exhibited or furnished without the written consent of I. Arruti.

No.	DATE	MODIFICATION	REASON	MOD. BY
0	18/06/21	Edited in new format.	CAD software change.	J.E.

MARKINGS:
LOT (month & year)
REFERENCE
BREAKING LOAD

REFERENCE	CODE	LENGHT L (mm.)	WEIGHT (Kg.)
TA-2/70	9579	70	0,80
TA-2/100	6702	100	1,04
TA-2/170	3494	170	1,58
TA-2/180	15829	180	1,66
TA-2/200	3173	200	1,82
TA-2/250	10541	250	2,21
TA-2/270	10530	270	2,36
TA-2/300	9075	300	2,60
TA-2/350	8755	350	2,99
TA-2/400	2225	400	3,38
TA-2/470	2227	470	3,92
TA-2/500	4278	500	4,16
TA-2/570	6701	570	4,70
TA-2/600	2203	600	4,94
TA-2/700	6809	700	5,72
TA-2/800	3530	800	6,50
TA-2/870	3370	870	7,04
TA-2/900	10785	900	7.28
TA-2/1000	3360	1000	8,06
TA-2/1070	13041	1070	8,60
TA-2/1175	5829	1175	9,42
TA-2/1200	14895	1200	9,62
TA-2/1500	6193	1500	11,96
TA-2/1660	9125	1660	13,20
TA-2/1700	14905	1700	13,50
TA-2/1710	9111	1710	13,59
TA-2/1800	12556	1800	14,30
TA-2/2100	14896	2100	16,64
TA-2/2150	12587	2150	17,03
TA-2/2400	12553	2400	18,98
TA-2/3200	13974	3200	25,22

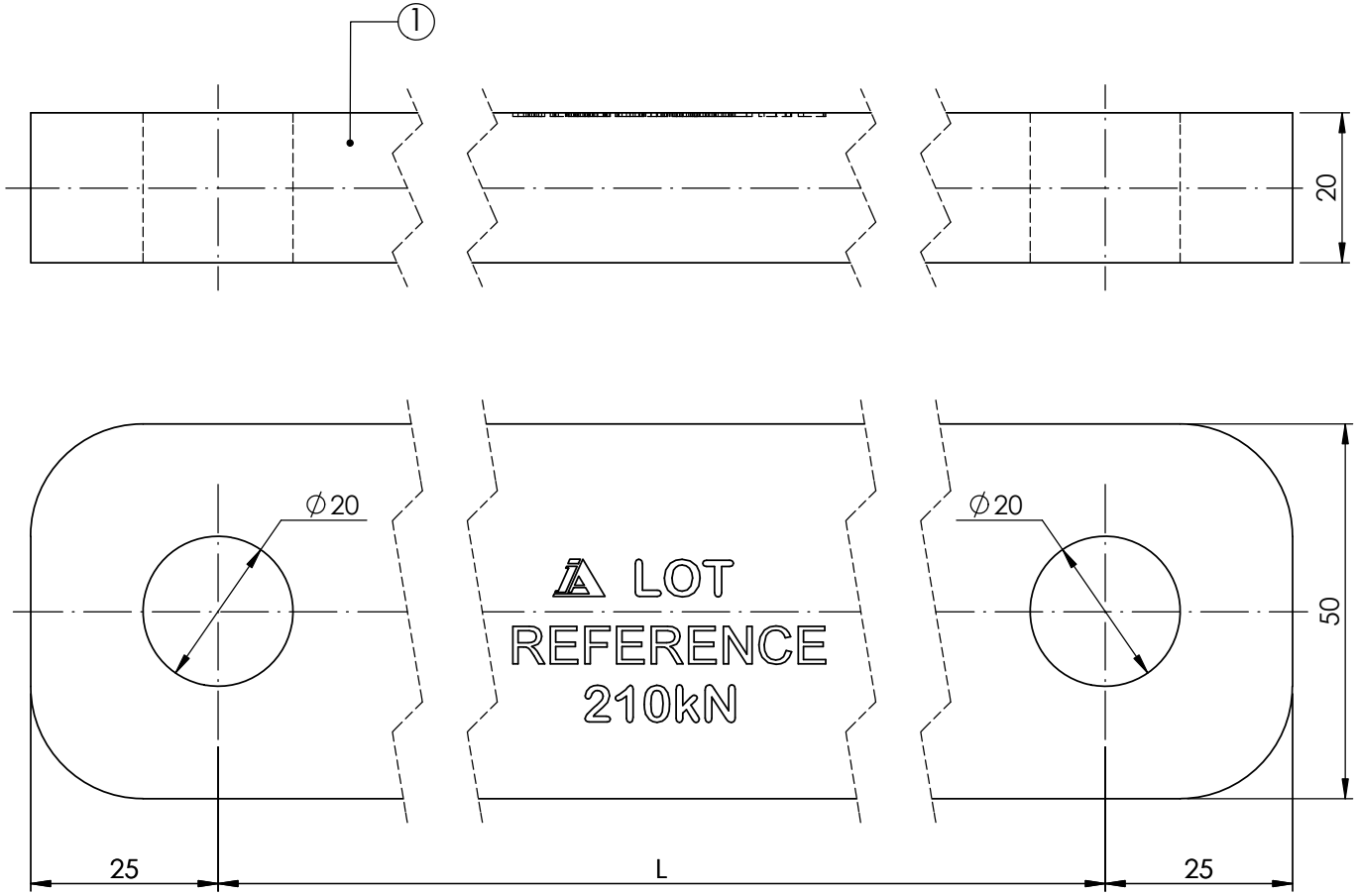

INDUSTRIAS ARRUTI S.A.
F40513

No.	QTY.	DESCRIPTION	MATERIAL	CODE	STANDARD	WEIGHT (Kg.)
1	1	EXTENSION LINK	GALVANIZED STEEL	TABLE	EN-10025	TABLE

UNITS (mm.)

- Manufactured acording to IEC 61284 standard
- Tolerances unless otherwise stated to be:
  Up to and including 35 mm. ±0.7 mm. Over 35 mm. ±2%
- Hot dip galvanized according to ISO 1461 standard

- M.B.S.L.: 21.000 daN
- M.D.S.L.: 70% M.B.S.L.
- Icc: Depend of the connexion to the piece
- Coating thickness. Local: 70µm. Average: 85µm

TOTAL WEIGHT: Table

	NAME				SCALE	DRAWING	ISSUE
DRAWN BY	J.E.		18/06/2021	EXTENSION LINK TA-2/L	1:1	TA-2-M	7
SIGNED BY	I.L.		18/06/2021				