No.	DATE	MODIFICATION	REASON	MOD. BY
0	15/06/12	Edited in new format.	CAD software change.	E.V.

MARKINGS:
LOT (month & year)
FORGER MARK
& REFERENCE

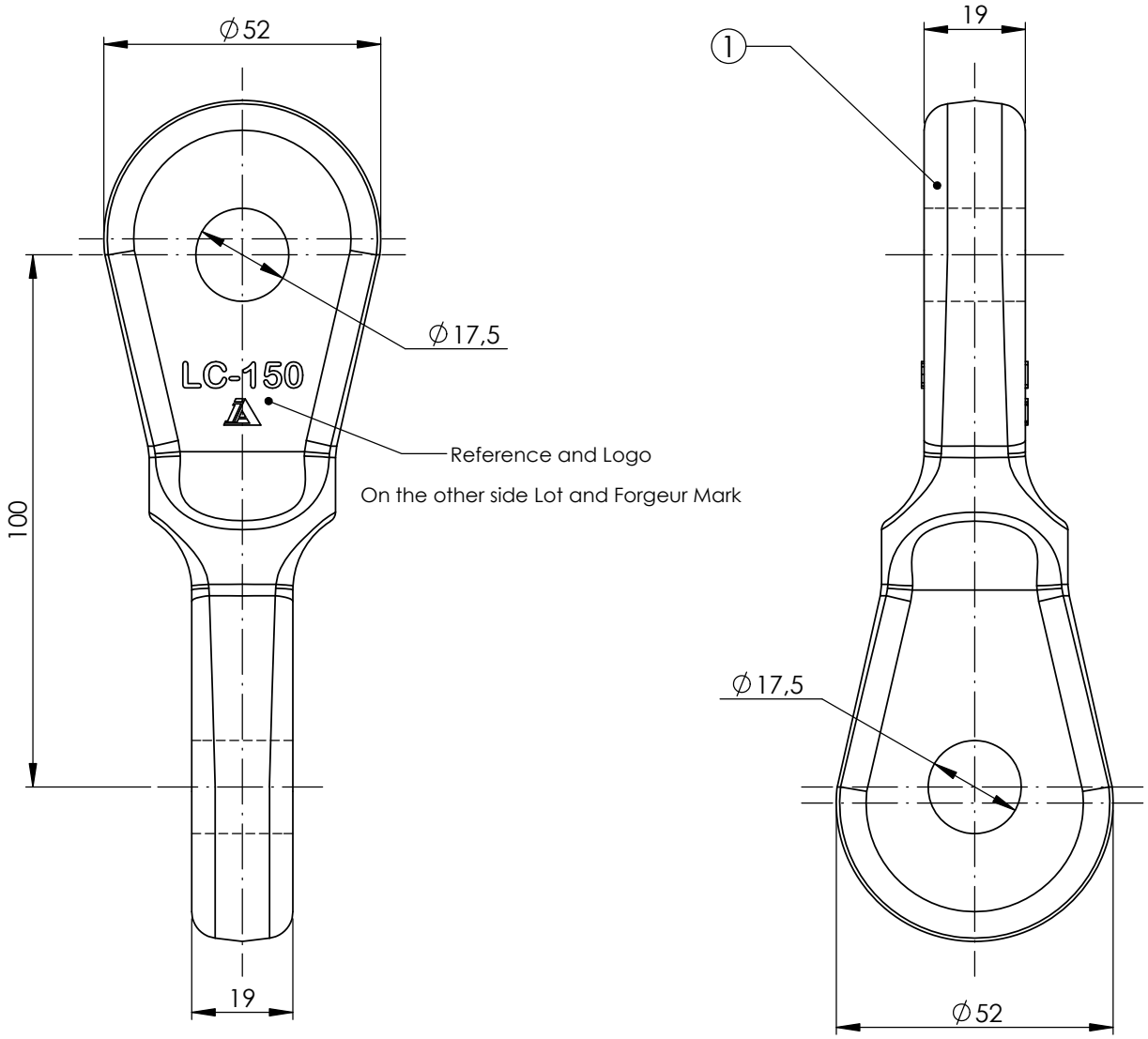

This drawing is property of I. Arruti and must not be copied, exhibited or furnished without the written consent of I. Arruti.

INDUSTRIAS ARRUTI S.A.

No.	QTY.	DESCRIPTION	MATERIAL	CODE	STANDARD	WEIGHT (Kg.)
1	1	TWISTED EYE LINK	GALVANIZED STEEL	6055	EN-10.083-2	0.87

UNITS (mm.)

- Manufactured according to IEC 61284 standard
- Tolerances unless otherwise stated to be: Up to and including 35 mm. ±0.7 mm. Over 35 mm. ±2%
- Hot dip galvanized according to ISO 1461 standard

- M.B.S.L.: 15.000 daN
- M.D.S.L.: 75% M.B.S.L.
- Icc: Depend of the connexion to the piece
- Coating thickness. Local: 70µm. Average: 85µm

TOTAL WEIGHT: 0.87 Kg.

F40513	NAME				SCALE	DRAWING	ISSUE
DRAWN BY	E.V.		15/06/2012	TWISTED EYE LINK			
SIGNED BY	I.L.		15/06/2012	LC-150/Ø17,5	3:4	6055-M	1