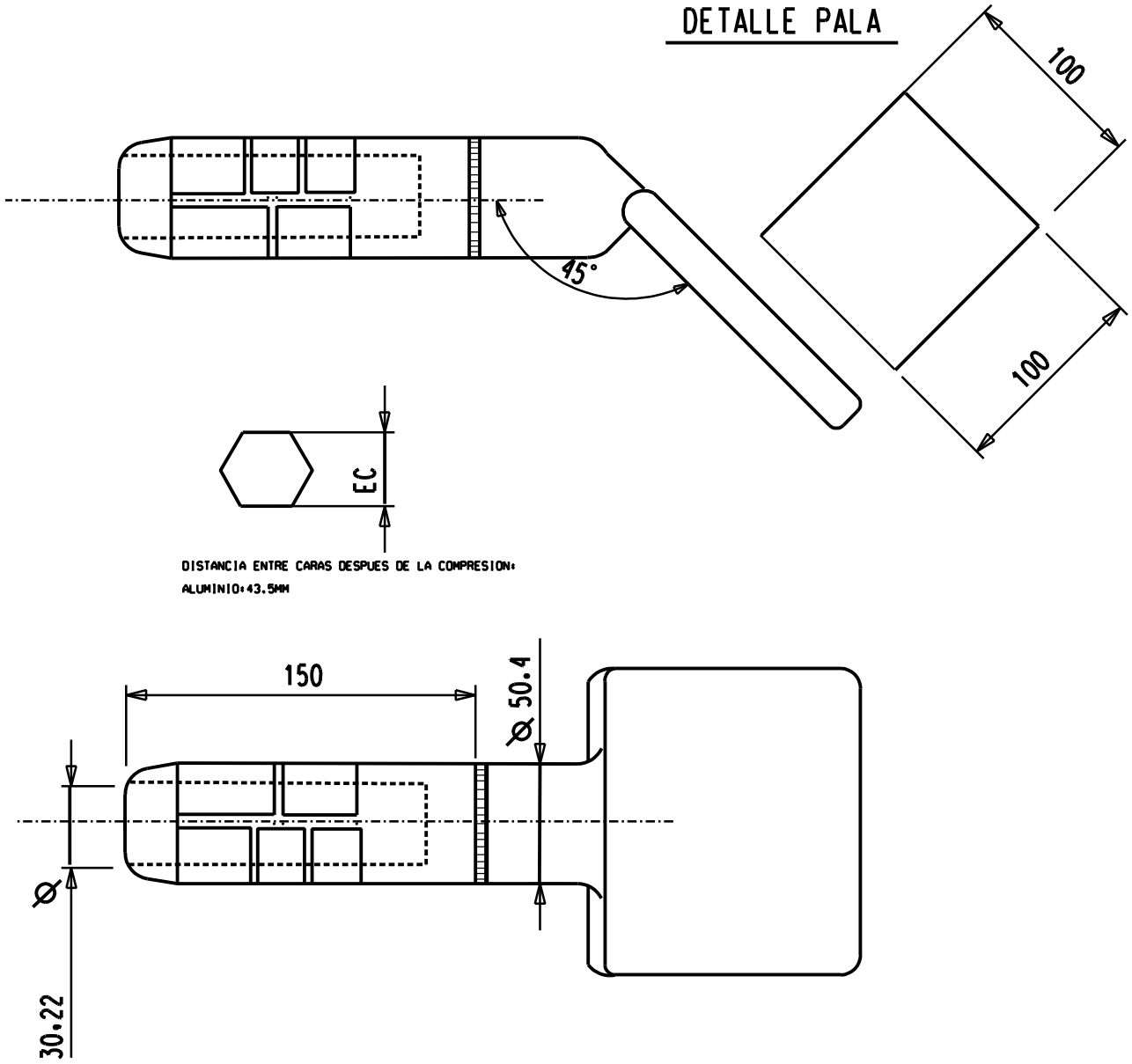

ITEM 7

N	CAN QTY	DENOMINACION DENOMINATION	MATERIAL	NORMA STANDARD	CARACTERISTICAS CHARACTERISTIC
			STAINLESS STEEL AISI-304 (A2-70)	UNE-36016	
			ALUMINIO/ALUMINIUM AL-7SI 0.6MG	UNE-38242	

ARRUTI SUBESTACIONES

45 CONNECTOR CONDUCTOR TO FLAT

CMLCCP45-3066

FECHA/DATE: 13-11-01
REVISION/ISSUE: 0
REALIZADO/DRAWN: E.DE BLAS
APROBADO/SIGNATURE:
SIN ESCALA/DO NOT SCALE